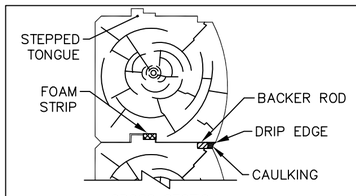

CROSS SECTION
WARD's PROFILE

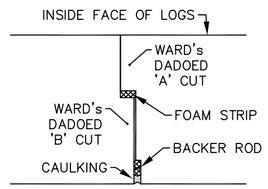

TOP VIEW
DADOED LOG END CUTS
WARD LOG HOMES ENGINEERED

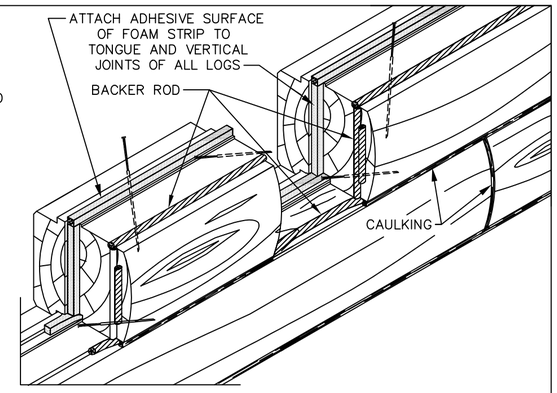

WARD LOG HOMES DETAILED DADOED LOG AND WEATHERPROOFING JOINERY SYSTEM

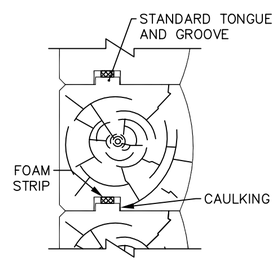

CROSS SECTION
TYPICAL LOG PROFILE

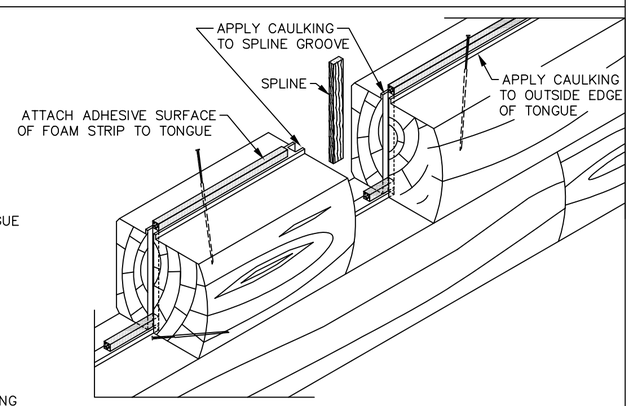

DETAILED TYPICAL SPLINED LOG SYSTEM

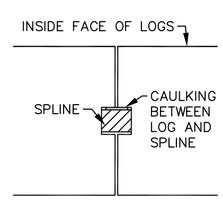

TOP VIEW
SPLINED LOG END CUTS

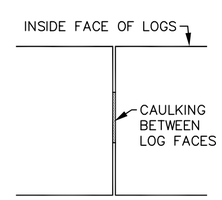

TOP VIEW
BUTT LOG END CUTS